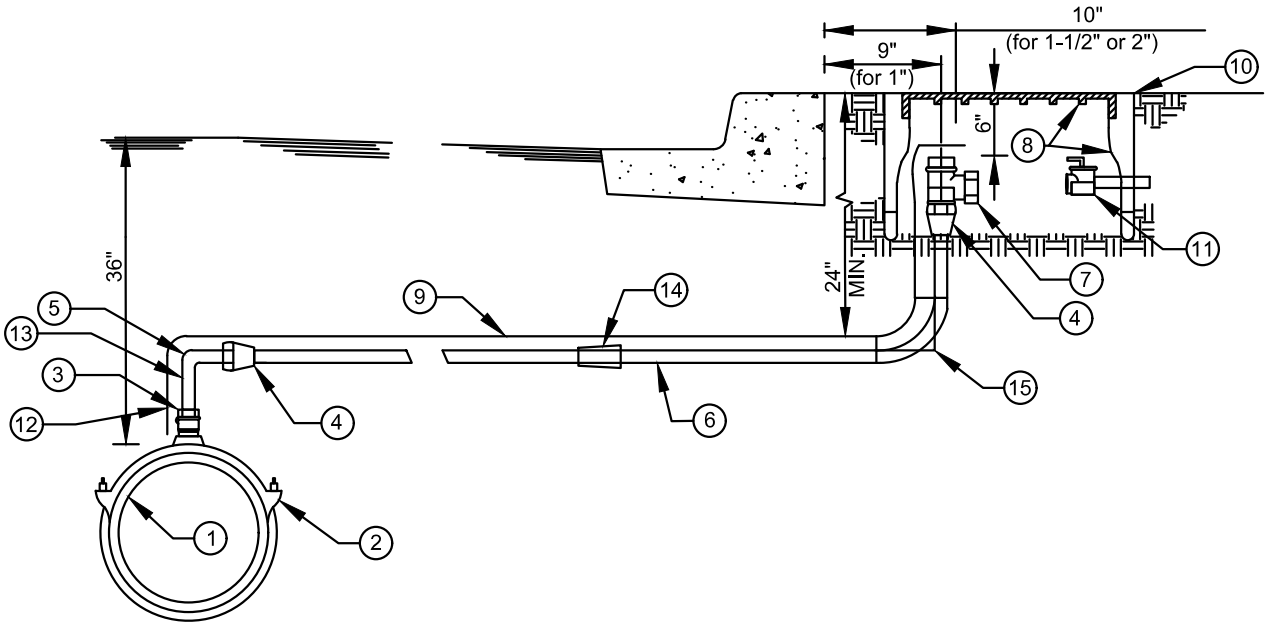


1. Water Main
2. Service Saddle 202BS X IP for C900; 202B X IP for AC/DI
3. Ball Corporation Stop MIP X MIP FB500-4-NL
4. MIP X COMP Coupling C-87-44-NL
5. Brass 90° Ell
6. 1" PVC SCH80
7. Angle Meter Stop (Ball Type) FIP BA13-444W-NL
8. Meter Box and Lid Christy Box W/ Fibrelyte Lid
9. 10 Gage Tracer Wire per specifications.
10. In unpaved areas, raise meter box 1" above the adjacent finished surface.
11. Customer Valve
12. 1" Brass Coupling (If Needed)
13. 1" Brass Nipple (If Needed)
14. 1" Brass Coupling w/ (2) MIP X COMP Coupling C-87-44-NL (if needed)
15. 1" Brass 90° w/ (2) MIP X COMP Coupling C-87-44-NL

| APPROVED BY THE DISTRICT ENGINEER | DATE | OCEANO COMMUNITY SERVICES DISTRICT<br>STANDARD DRAWING | |
|---|---|---|---|
| | 05/11/2022 | | |
| Revisions | Appd. | Date | SINGLE WATER SERVICE | W-5 |
| | | | | NO SCALE |